Hillmar
Hillmar Industries Ltd.
7371 Vantage Way
Delta, BC V4G 1C9
P:604 946-7115 F:604 946-0329
info@hillmar.com www.hillmar.com

COUPLING GKM
GKM-145-MSH-LSH-0355-20-1890
SPECIFICATION SHEET
SLS & MKTG
ENGLISH

Sheet Number:	
Job Number:	
Form Number:	429-630-52073PT

Company / Project Reference:	Date.:	Page.:	Document Package No.:	Rev.:
		1 OF 1		

Inventor Drawing

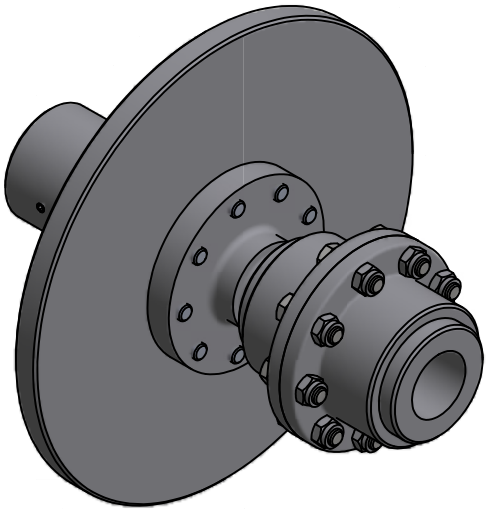

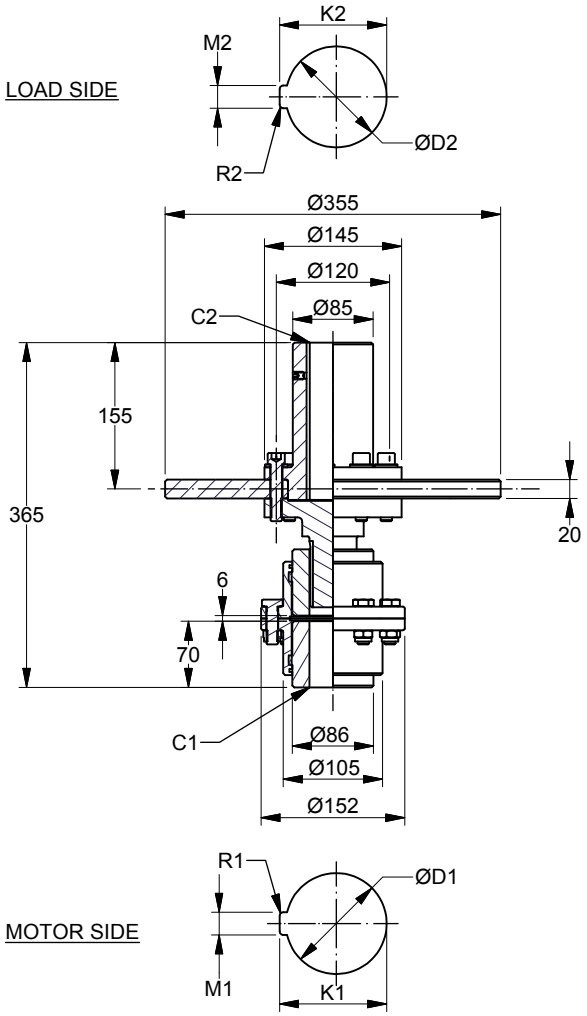

FEATURE	CODE
Gear coupling	GKM
Coupling size (Hub OD)	145
Motor side	MSH
Load side	LSH
Disc diameter (mm)	0355
Disc thickness (mm)	20
Maximum coupling torque (Nm)	1890

Example for ordering	GKM-145-MSH-LSH-0355-20-1890

TECHNICAL DATA

Disc model	SDBD-0355-20-145
Disc diameter (mm)	355
Hub bore size MIN. (mm)	40
D1 MAX. (mm)	70
D2 MAX. (mm)	55
Moment of inertia (kgm^2)	0.319
Mounting bolts	9 x M12
Bolt tightening torque (Nm)	125
MAX. coupling torque TkMAX (Nm)	1890
NOM. coupling torque TkN (Nm)	800
MAX. coupling speed (RPM)	4000
Weight (kg)	32

CUSTOMER SPECIFICATIONS

Motor side	Load side
D1:_____mm	D2:_____mm
M1:_____mm	M2:_____mm
K1:_____mm	K2:_____mm
R1:_____mm	R2:_____mm
C1:_____mm	C2:_____mm

NOTES

Coupling balancing grade ISO 1940-G6.3 is guaranteed for all coupling parts.

All figures are nominal figures only

All dimensions are in millimeters

Document Template #710-101-62058

** ALL TECHNICAL DATA IS SUBJECT TO CHANGE WITHOUT NOTICE **
Hillmar works have a fully registered ISO 9001-2008 quality assurance programme (QCB #01-1525)

C:\TEMP\a3f49bb3-e10c-4cd0-aed8-26c1c4c1b337\8000052819?\HILLMAR\HILLMAR PRODUCTION\04 THRUSTER DB\0700-4\07004005 PKM-GKM-RKSM-RKX\SPC-SHT-PKM-GKM-RKSM-RKX\02 GKM\52073 GKM-145-MSH-LSH-0355-20-1890.idw